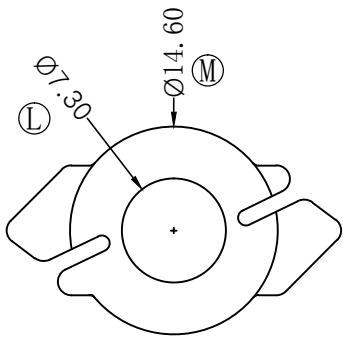

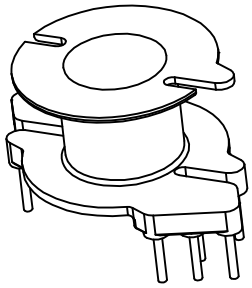

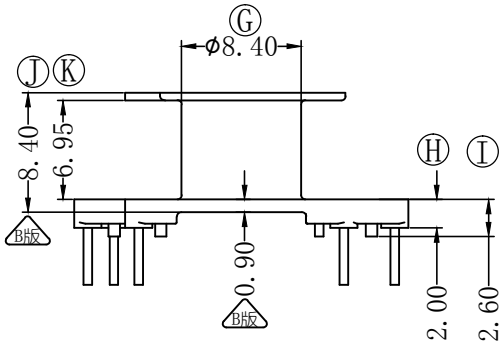

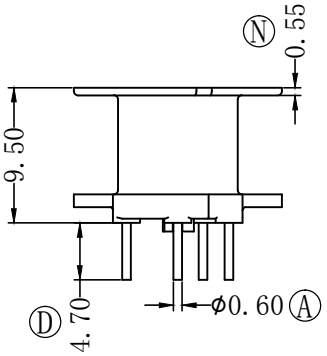

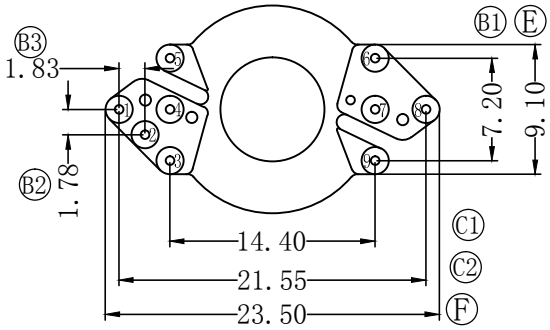

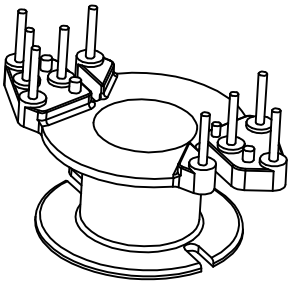

REV.	REVISIONS REC.	DATE.	REV.	REVISIONS REC.	DATE.
B	尺寸旁边有 B版 就是改动地方	2013.1.10			

DRAWN DRAFTED BY	HZX	TOLERANCES 0<L≤4 ±0.1 4<L≤16 ±0.2 16<L≤63 ±0.3 壁 厚 ±0.15	PIN PITCH ±0.20	ANGLE: ±1°	TITLE: RM-7
CHECKED APPROVED BY	HZP			UNIT: MM	BOBBIN MATERIAL: PHENOLIC UL REC. UL 94V-0
MX 东莞市铭兴电子有限公司 DONG GUAN MING XING ELECTRONICS CO.,LTD		TEL:0769-86369622 FAX:0769-86369611		SCALE: 1/1	TERMINAL MAT: CP WIRE PIN TENSION LOAD: 1.0kg
MX 铭兴电子有限公司（靖江分公司） JING JIANG MING XING ELECTRONICS CO.,LTD		TEL:0523-84523228 FAX:0523-84521028		DATE: 2011.05.16	DRAWING NO: MX-0701 REV. B